Freescale Semiconductor
Data Sheet: Advance Information

Document Number: USB2SERA11DS
Rev. 0, 10/2012

USB2SERA11

USB2SERA11 Data Sheet

USB to UART Application Specific IC

24-pin QFN
Case 1897

Introduction

Freescale Ready Play Solutions integrate a certified function to different applications allowing customers to add features while reducing development cost. This simplifies design cycles and enables scalability in applications and systems.

The USB2SER is a USB to UART bridge controller on a 5 x 5 mm lead free QFN24. It is a simple low cost solution to enable a USB for an embedded system with a UART port, reducing external component counts. It supports USB 2.0 full-speed and TTL RS232, or RS485 UART with options for hardware flow control, Software Flow control (Xon-Xoff), even or odd parity, and stop bits configuration.

Features

- Single chip USB to UART Data Transfer (RS232 or RS485)
- USB specification 2.0 compliant, full speed (12 Mbps)
- User programmable custom baud rates from 300 bps to 115200 bps
- UART supports 8 bit data, 1 or 2 stop bits and odd, even or no parity
- RESUME signal to request a remote wake-up and SUSPEND output to indicate that the device is in suspended mode
- Integrated 3.3 V regulator for a USB IO
- Integrated Power-On-Reset circuit
- Integrated 2 MHz – 48 Mhz clock multiplier PLL
- Supports 2 MHz, 4 MHz, 6 MHz, 8 MHz, 12 MHz, and 16 MHz external crystals with automatic crystal frequency detection
- USB bulk data transfer modes for data communication
- 3 V to 5 V single supply operation
- UHCI / OHCI / EHCI host controller compatible
- Configurable USB, VID, PID, and device description strings in the internal flash
- Configurable password to protect the device from additional parameter modifications
- Data formats supported 8 bits data, 1 and 2 stop bits
- Parity odd, even, no parity
- Hardware flow control (RTC / CTS) or Software Xon/Xoff flow control
- Adjustable receive buffer timeout from 1 ms through 99 ms.
- RS485_TXEN signal to support RS485
- USB and UART activity pins to indicate communication activity and fail sequences

Drivers support

The USB2SER can act as a CDC standard device that eliminates the need for custom drivers for operation when flow-control is not needed (only an INF file is required).

For flow control support, COM emulator drivers are available for:

- Windows XP 32-bits and 64-bits versions
- Windows Vista 32-bits and 64-bits versions
- Windows 7 32-bits and 64-bits versions
- Linux Kernel 2.6.34 and higher

Additionally to the drivers, a software configuration tool is provided to customize the Product ID, Vendor ID, Product strings, current consumption parameters and password protection option, to prevent further modifications to the device information. For driver installation and software go to:

The GUI and Driver Installer at www.freescale.com/usb2ser.

Package

USB2SER comes in a compact 5 x 5 mm Pb free RoHS compliant QFN24.

24 QFN
Case 1897

This document contains information on a product under development. Freescale reserves the right to change or discontinue this product without notice.

© Freescale Semiconductor, Inc., 2012. All rights reserved.

USB Compliant Device

USB2SER is fully compliant with the USB 2.0 specification and has been given the USB-IF Test-ID 40001386.

Windows Certification

The Windows Logo Program is designed to address the current and future market needs of customers using the Windows platform. The Windows logo signifies the compatibility and reliability of systems and devices with the Windows operating system. It gives customers confidence that your product is thoroughly tested with Microsoft-provided tools and ensures a good user experience.

Product with Windows 7 Logo assures compatibility and reliability. Indicates that our driver has been tested to ensure that they meet Microsoft standards for Windows 7 as well as the quality level that ensures a good Windows experience for end users.

Designed and tested for ease of use, better performance, and enhanced security on PCs running Windows Vista. Certified for Windows Vista products:

- Meet the technical requirements for superior experiences with photos, music, videos, games, and online communications.
- Ensure compatibility with other Certified for Windows Vista products.

Windows XP Certification indicates systems that provide hardware acceleration technology supporting Windows XP Mode. Windows XP Mode allows legacy applications which require Windows XP to run in a virtual machine instance on a Windows 7 PC.

Contents

USB2SER

Introduction 1
Features 1
Drivers Support 2
Package 2
USB Compliant Device 2
Pins and Connections 4
Block Diagram 4
Device Pin Out 5
Recommended System Connections 5
Signals Description 6
Power (V_{DD}, V_{SS}, V_{SSOSC}, V_{USB33}) 7
Reset and System Initialization 7
VID and PID configuration 8
Functional Description 8
Crystal Frequency Auto-detection 8
Operating errors 9
RS232 Connections 9
UART Baud rates 9
Flow Control Operation 11
Operation with commercial terminals for serial communication 11
Drivers and GUI 10
Graphical User Interface for Product Configuration 11
Windows Driver 14
Linux Driver 14
Appendix A – Electrical Characteristics 17
Parameter Classification 17
Absolute Maximum Ratings 17
Thermal Characteristics 18
Electrostatic Discharge (ESD) Protection Characteristics 20
DC Characteristics 20
Supply Current Characteristics 21
Appendix B – Package information 21
Appendix C – INF File 21
Appendix D – USB2SEREVB Layout, Schematics, and BOM 23

1 Pins and Connections

1.1 Block diagram

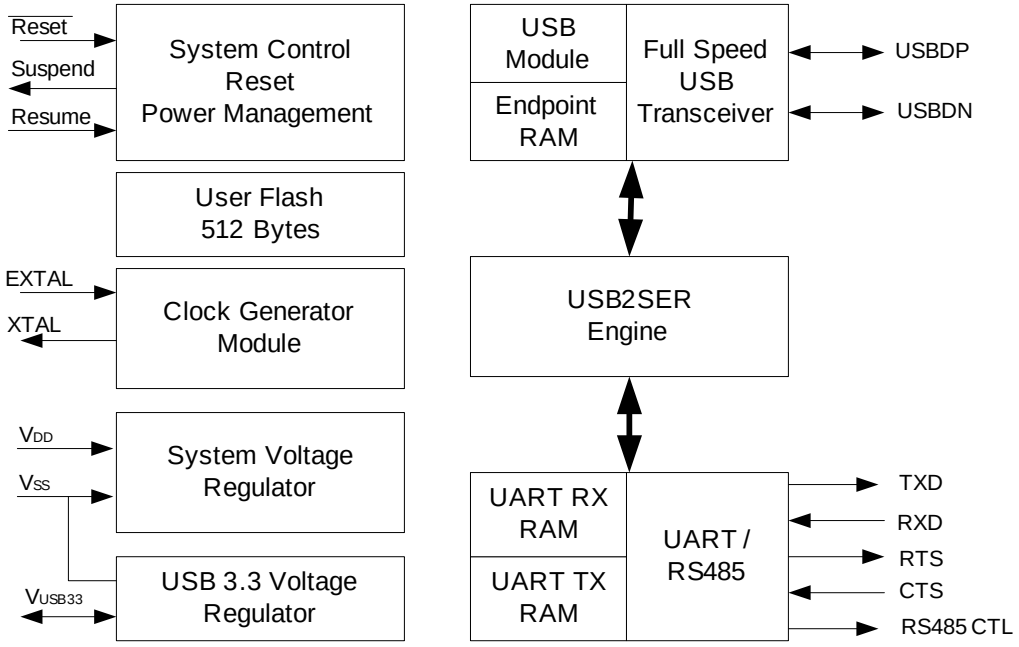

Figure 1. Device block diagram

1.2 Device pin out

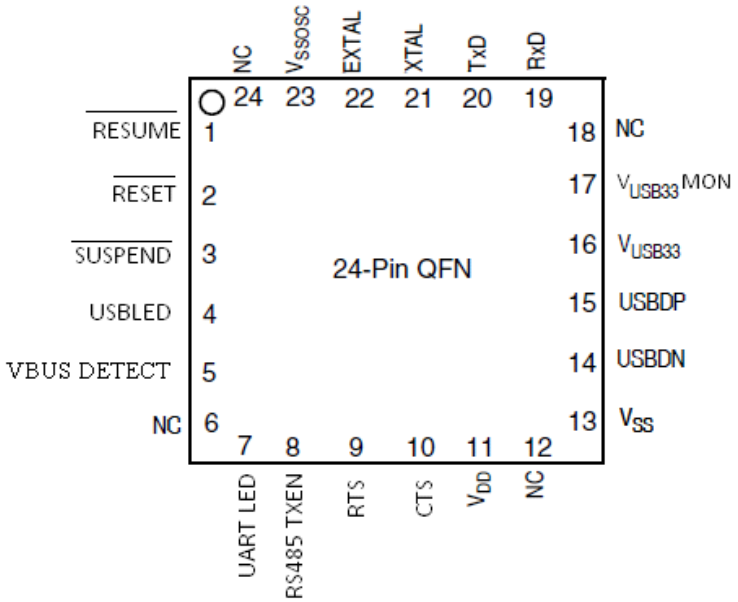

Figure 2. USB2SER — 24-QFN Package

1.3 Recommended system connections

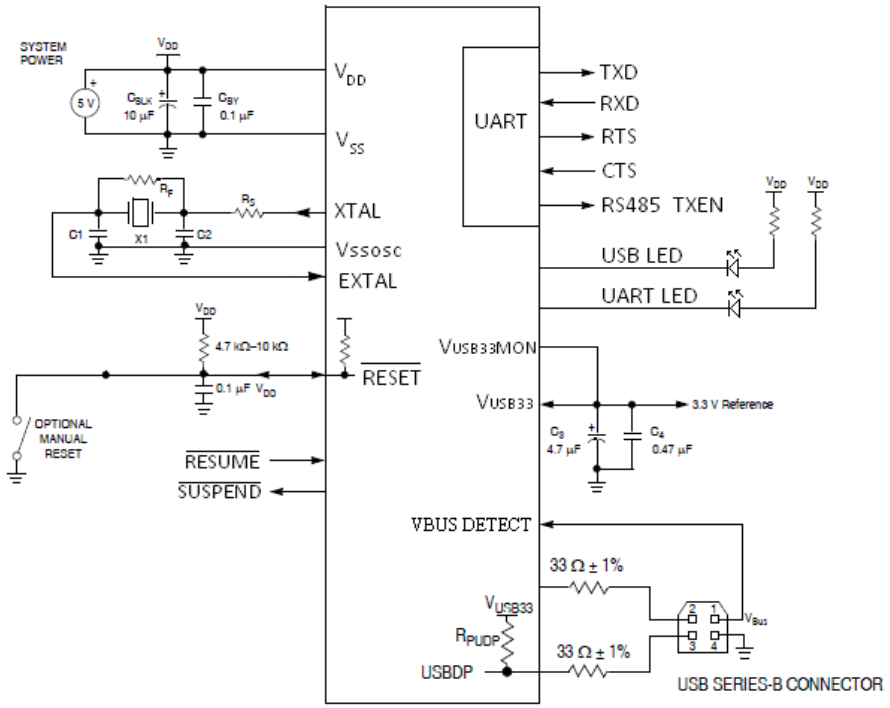

Figure 3. System connections working at 5 V

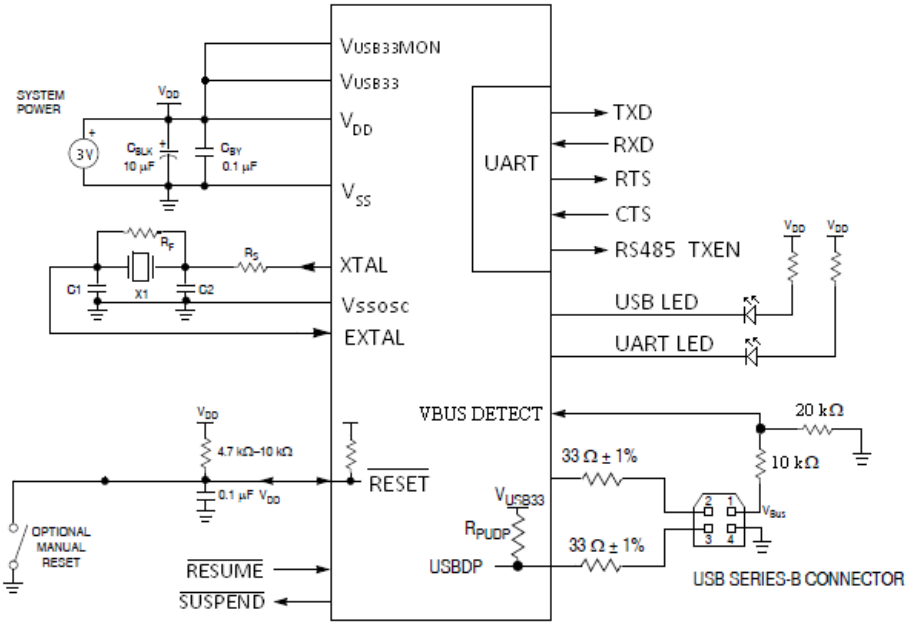

Figure 4. System connections working at 3 V

1 RC filter on RESET is recommended for EMC-sensitive applications.

2 RPUDP is shown for full-speed USB only. The diagram shows a configuration where the on-chip regulator and RPUDP are enabled. The voltage regulator output is used for RPUDP. RPUDP can optionally be disabled if using an external pullup resistor on USBDP.

3 VBUS is a 5.0 V supply from upstream port that can be used for USB operation.

4 USBDP and USBDN are powered by the 3.3 V regulator.

5 When using internal VUSB33 as supply, there needs to be an external cap.

6 When hardware flow control is not being used connect RTS output to CTS input. Avoid leaving these pins floating

1.4 Signals description

Table 1. Signal descriptions

Pin Number	Pin Name	Description
1	/RESUME	Pin to request a remote wake-up
2	/RESET	Reset pin
3	/SUSPEND	Indicates when the device is in suspended mode
4	USB_LED	USB activity LED connection
5	VBUS_DETECT	USB Voltage Bus detection
6	NC	No connect
7	UART_LED	UART Activity LED connection
8	RS485_TXEN	Transmitter control pin for RS485 transceiver
9	RTS	UART request to send connect to CTS when hardware flow control is no being used.
10	CTS	UART clear to send connect to RTS when hardware flow control is no being used.

Table 1. Signal descriptions

11	V_{DD}	Supply voltage
12	NC	No connect
13	VSS	0 V ground input
14	USBDN	USB data minus signal
15	USBDP	USB data plus signal
16	V_{USB33}	Bidirectional signal connected to the 3.3 V regulator
17	V_{USB33}MON	USB Internal regulator monitor pin. Connect to V_{USB33}
18	NC	No connect
19	RXD	UART reception pin
20	TXD	UART transmission pin
21	XTAL	XTAL crystal oscillator pin for Pierce oscillator
22	EXTAL	EXTAL crystal oscillator pin for Pierce oscillator
23	VSS_OSC	0 V ground input for the oscillator reference
24	NC	No connect

1.5 Power (V_{DD}, V_{SS}, V_{SSOSC}, V_{USB33})

The V_{DD} and V_{SS} are the primary power supply pins for the USB2SER. This voltage source supplies power to all the I/O buffer circuitry and to an internal voltage regulator.

Typically, application systems have two separate capacitors across the power pins. A 10 µF tantalum capacitor which provides bulk charge storage for the overall system and a 0.1 µF ceramic bypass capacitor to suppress high-frequency noise is located as near as possible to the paired V_{DD} and V_{SS} power pins. The USB2SER has a VSSOSC pin. This pin must be connected to the system ground plane or to the primary V_{SS} pin through a low-impedance connection.

If using an external 3.3 V regulator as an input to VUSB33, the supply voltage, V_{DD}, must not fall below the input voltage at the VUSB33 pin. If using the internal 3.3 V regulator, do not connect an external supply to the VUSB33 pin. In this case, V_{DD} must fall between 3.9 V and 5.0 V for the internal 3.3 V regulator to operate correctly. The USB2SER uses the VUSB33MON pin to detect V_{DD} used and configure the device accordingly.

1.6 Reset and system initialization

The USB2SER has three reset sources:

- Power-on Reset (POR)
- External Reset Pin (RESET)
- Software update Reset (Soft Reset)

System startup from any reset source starts with the crystal frequency auto-detection that takes 48 ms. After this step, the device initializes the internal PLL to setup the internal clock to 48 MHz which will be used as the reference for the USB and UART to work properly.

After reset from a source different than a POR, the V_{USB33}MON is configured to discharge the capacitors connected to the V_{USB33} voltage when working from a 5 V power supply; this adds a 40 msec delay to the system startup to determine if the internal voltage regulator has to be enabled.

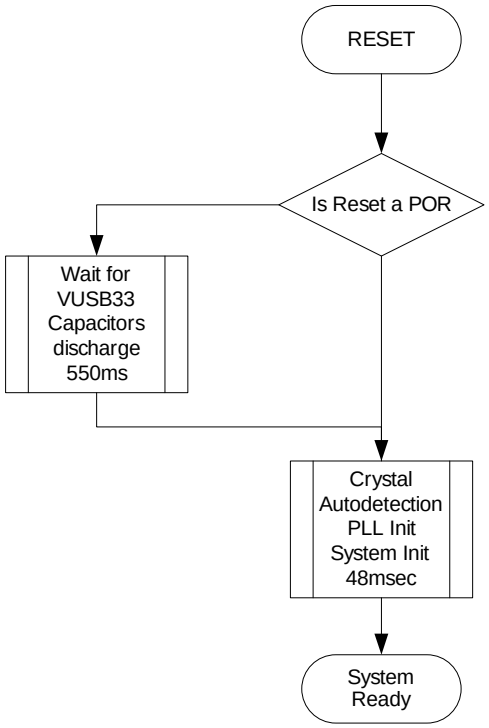

Figure 5. Clock and system initialization

1.7 VID and PID configuration

The USB2SER includes the functionality to modify the VID, PID, Product Description Strings and Power Descriptor Value. The default parameters are:

- VID — 15A2 Hex
- PID — 0066 Hex
- Power Descriptor Value for 100 mA
- Receive buffer timeout for 10 mS
- Manufacturer string — FREESCALE SEMICONDUCTOR INC.
- Product string — USB TO SERIAL
- Serial number string — Version 1.1

Each USB peripheral requires a unique VID/PID combination. Vendor IDs are assigned by the USB-IF. It is possible to us the factory VID/PID combination, only if the Product strings are not modified. In case that the strings are changed, it is necessary to get a different VID/PID combination.

Freescale, as a member of the USB-IF, owns a Vendor ID and manages a database of Product IDs to be used in association with the VID. If a customer of Freescale's USB-enabled products is unable to procure their own VID, apply to use Freescale's VID in association with an assigned PID.

In case the device loses power in the middle of a descriptors configuration process, the default parameters will be loaded to ensure that the part remains functional in all cases. If this happens, the password to protect the device from further modifications will also be reset to the default value which is "FFFFFFFFFFFFFFFF"

2 Functional Description

The USB2SER is a USB2.0 Full Speed (12Mb/s) to the UART (RS232 or RS485) converter. This device integrates an on-chip Full Speed USB 2.0 compatible transceiver, the USB serial interface engine, and an on-chip 3.3 V voltage regulator to a UART communication.

2.1 Crystal frequency auto-detection

The USB2SER supports 2 MHz, 4 MHz, 6 MHz, 8 MHz, 12 MH, and 16 MHz external crystals connected in a Pierce Oscillator Configuration.

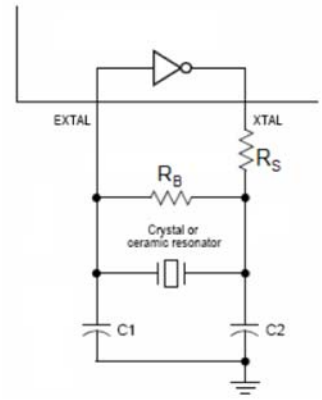

Figure 6. Pierce Oscillator

2.2 Operating errors

In case there is an error with the USB2SER, the device will generate a 2-bit gray sequence using the UART_LED and USB_LED. The following are the possible errors and the device expected behavior:

- For a PLL issue (crystal outside the operating range) the gray sequence changes every 60 ms
- For a USB issue the sequence changes every 200 ms

2.3 RS232 connections

Figure shows the recommended connections to an RS232 transceiver. When interfacing to an RS485 transceiver, the RS485_TXEN controls the transmitter enable signal. When no hardware flow control is used, lines RTS (pin9) and CTS (pin10) must be connected together.

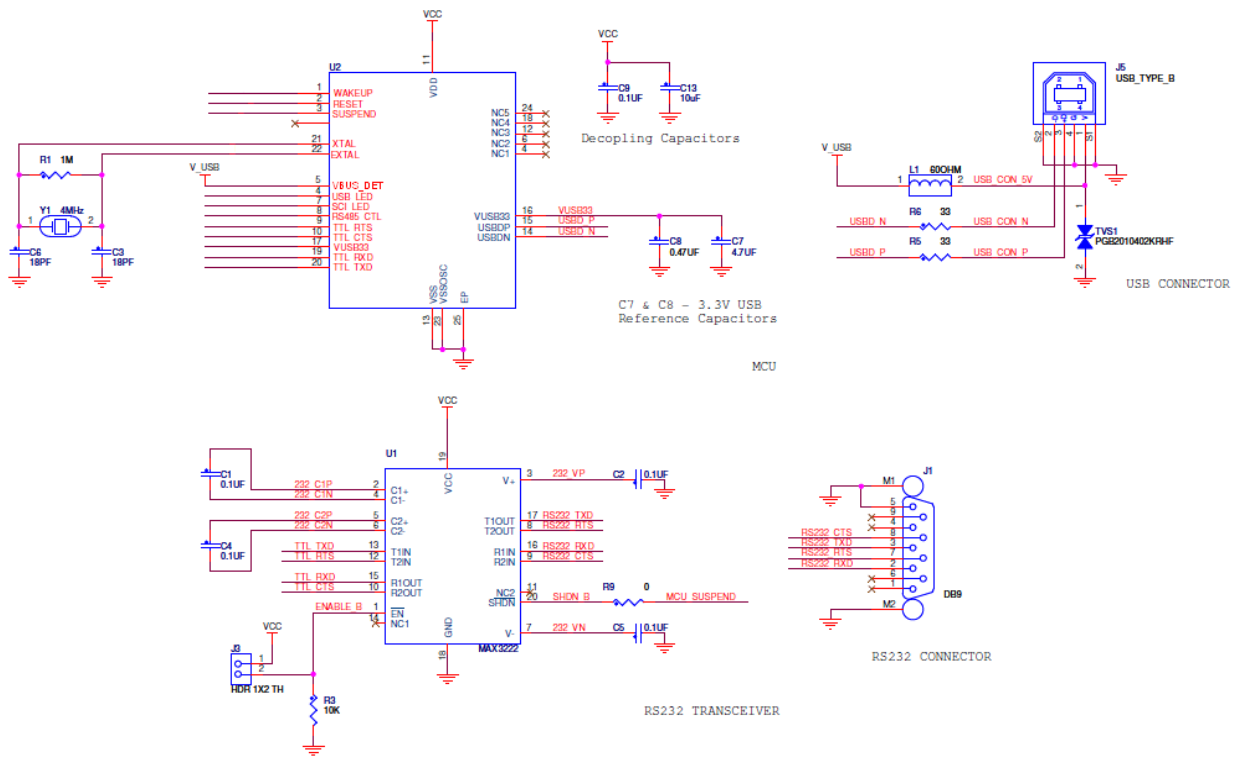

Figure 7. Example schematic using an RS232 transceiver

2.4 UART Baud rates

Baud rate is calculated by generating an internal divisor used to generate the clock for the UART communication module. The following calculation is used to estimate the real baud rate that will be generated by the device:

$$\text{BaudRate} = \frac{24,000,000}{\text{Round}\left(\frac{24,000,000}{\text{DesiredBaudrate} \times 16}\right) \times 16}$$

Where $\text{Round} = \frac{24,000,000}{\left(\frac{24,000,000}{\text{DesiredBaudrate} \times 16}\right)}$ is the closest integer resulting from the division.

After reset the device is automatically configured to communicate at 115,200 bps which is the maximum allowed value.

2.5 Flow control operation

The device works as a standard Communication Device Class (CDC); to add flow control options to this class, the drivers are installed in the operating system to enable this functionality.

When working without any flow control option, it is possible to generate an overflow condition, if the USB host does not request for the data received through the serial interface fast enough. Using any flow control option (hardware or software) eliminates the overflow possibility.

The following formula may be used to determine the amount of time without requesting data to generate the overflow condition:

$$Overflow_Timeout = \frac{BitsPerByte}{BaudRate} * 96$$

Where:

BitsPerByte — 11 for 2 stop bits or any parity option or 10 for 1 stop bit without parity

96 is the Serial buffer size in Bytes

In case the USB host does not request for data before the time out expires and there is no flow control option selected, previously received data will be overwritten with the new received information.

2.6 Operation with commercial terminals for serial communication

Standard terminals for UART communication may have some limitations in the type of data that may be sent/received or some protocol supports.

Known limitations are:

- Binary option must be supported to communicate data that is not standard text
- Communication Protocols (that is, Z modem with Crash recovery, X modem, Y modem, Kermit, and so on) may include a protocol timeout that may not work in baud rates below 2400 bps

When using a standard terminal (HyperTerminal or TeraTerm for example) you must make sure that the proper configuration is selected to send the desired type of information.

3 Drivers and GUI

The USB2SER can work with the standard Windows driver or with a custom driver for expanded functionality. The Microsoft Windows driver will enable a USB to COM port communication but without Hardware or Software Flow control features from the Host PC to the device. To use this approach, it is possible to copy contents from Appendix C and save it as a file with extension .inf. When the driver is requested the first time after connecting the device it is possible to select this INF file.

Freescale custom drivers for communication allow using any standard terminal or customer software to enable or disable Hardware or Software flow control. The driver also comes with a set of functions to configure Maximum Current consumption through the USB port, Product Strings, Vendor ID, Product ID and receive buffer timeout. Password protects these settings. If any of the product strings or VID/PID is changed, it is necessary to send the product for USB certification if the customer wants to use the USB logo.

3.1 Graphical user interface for product configuration

The GUI provided with the USB2SER is intended to allow the modification of the Bus Power configuration, Vendor ID, Product ID and any of the manufacturer strings. This allows the customization of any product using this product. It is also possible to password protect the device configuration to avoid future modifications after a product release.

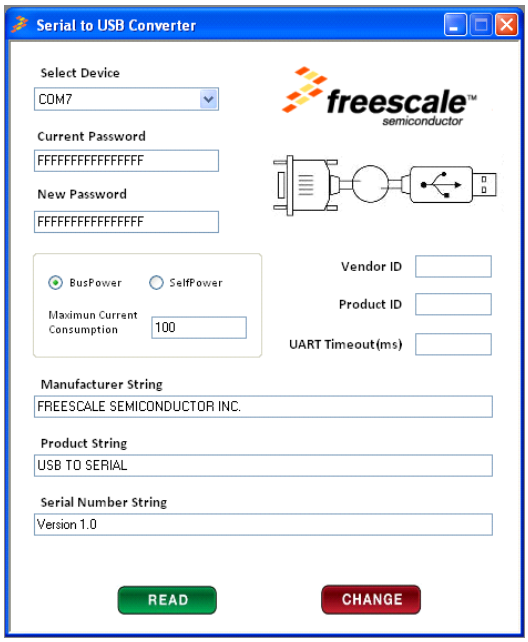

To configure any or all these settings, after the GUI is open, select the correct COM port for the USB2SER.

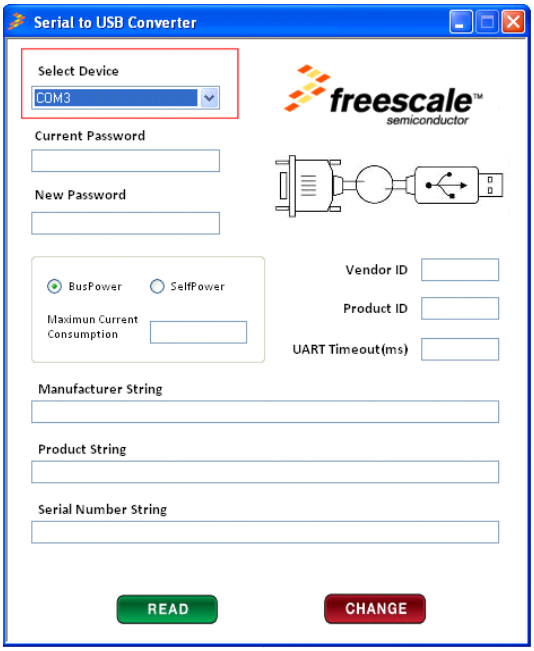

To Read the configuration of the USB2SER write the correct password on the current password field and click on the Read button (The Password must be 16 characters long, values allowed are 0–9 and A–F, default password is “FFFFFFFFFFFFFFFF”)

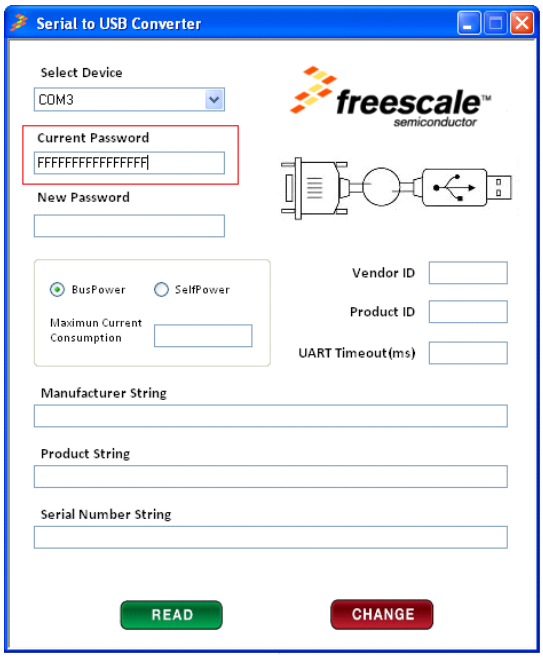

You should now be able to see the USB2SER configuration:

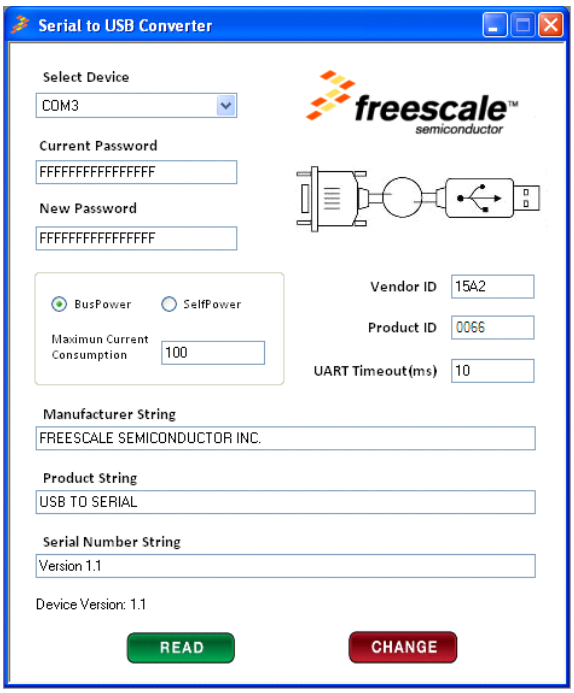

To change any or several parameters from current list, change the desired values and click the Change button.

- For Maximum Current Consumption you can use a value between 20 and 500 and for definition of USB.org, this field only supports even values, value of 0 will cause to change the selection to Self Powered.
- For UART receive buffer timeout you can use a value between 1 and 99.
- For Vendor ID and Product ID values allowed are 0–9 and A–F
- For Manufacturer String, Product String and Serial Number Strings, any printable ASCII character is valid
- All the fields must have valid information to change the configuration of the USB2SER Bridge

- In case you need to change the current password, you will be able to by writing the new password in the New Password field, then click on the Change button to finish this step.
- Click the Read button with the new password in the Current Password field to confirm that USB2SER bridge setting has been updated according to the previous step.

3.2 Windows driver

Windows driver comes with a product installer. To install it:

Download the latest installer version from www.freescale.com/usb2ser.

To install, double-click on the installation file. A startup window appears.

On the opening window, follow the on-screen instructions

Additional documentation is available for driver usage when developing custom applications in Windows.

3.3 Linux driver

To install the Linux driver follow these simple steps:

1. Unpack the .tar file downloaded
2. In the folder containing the un packed files, check for these four files:
   - cdc-freescale.c
   - cdc-freescale.h
   - Makefile
   - Install.sh
3. Open a console and move to the previously mentioned folder.
   - Change current user to root.
     - $ sudo su
     - [sudo] password for user:
4. Execute Install script passing as a parameter the name of the host distribution (all lower case).
   - Ubuntu
     - # ./Install.sh ubuntu
   - Fedora
     - # ./Install.sh fedora
   - Red Hat
     - # ./Install.sh redhat

To uninstall

1. Move to CDC driver location.
   - # cd /lib/modules/$(uname -r)/kernel/drivers/usb/class/
2. Check for backup file.
   - # ls
   - cdc-acm2011.01.27-11.55.54.ko cdc-acm.ko cdc-wdm.ko usblp.ko usbtmc.ko

NOTE

The backup name varies because it is created at install time merging the original file name plus the date-time. An example is shown in the upper text.

3. Erase current CDC driver.
   - # rm cdc-acm.ko

4. Rename backup file.
   — # mv cdc-acm2011.01.27-11.55.54.ko cdc-acm.ko

Appendix A Electrical Characteristics

This chapter contains electrical and timing specifications.

A.1 Parameter Classification

The electrical parameters shown in this supplement are guaranteed by various methods. To give the customer a better understanding, the following classification is used and the parameters are tagged accordingly in the tables where appropriate:

Table A-1. Parameter classifications

P	Those parameters are guaranteed during production testing on each individual device.
C	Those parameters are achieved by the design characterization by measuring a statistically relevant sample size across process variations.
T	Those parameters are achieved by design characterization on a small sample size from typical devices under typical conditions unless otherwise noted. All values shown in the typical column are within this category.
D	Those parameters are derived mainly from simulations.

NOTE

The above classifications are used in the column labeled C in applicable tables of this data sheet.

A.2 Absolute Maximum Ratings

Absolute maximum ratings are only stress ratings. Functional operation at maximum is not guaranteed. Stress beyond the limits specified in Table A-2 may affect the device reliability or cause permanent damage to the device. For functional operating conditions, refer to the remaining tables in this section.

This device contains circuitry protecting against damage due to high static voltage or electrical fields. However, it is advised that normal precautions be taken to avoid application of any voltages higher than the maximum-rated voltages to this high-impedance circuit. Reliability of operation is enhanced if unused inputs are tied to an appropriate logic voltage level (for instance, either V_{SS} or V_{DD}).

Table A-2. Absolute maximum ratings

Rating	Symbol	Value	Unit
Supply voltage	V_{DD}	2.7 to 5.5	V
Input voltage	V_{in}	–0.3 to V_{DD} + 0.3	V
Instantaneous maximum current Single pin limit (applies to all port pins)[1, 2, 3]	I_D	± 25	mA
Maximum current into V_{DD}	I_{DD} 120	mA	
Storage temperature	T_{stg}	–55 to 150 –	C
Maximum junction temperature	T_J	150 –	C

1. Input must be current limited to the value specified. To determine the value of the required current-limiting resistor, calculate resistance values for positive (VDD) and negative (VSS) clamp voltages, then use the larger of the two resistance values.
2. All functional non-supply pins are internally clamped to VSS and VDD.
3. Power supply must maintain regulation within operating VDD range during instantaneous and operating maximum current conditions. If positive injection current (VIn > VDD) is greater than IDD, the injection current may flow out of VDD and can result in the external power supply going out of regulation. Ensure external VDD load will shunt current greater than maximum injection current. This will be the greatest risk when the MCU is not consuming power. Examples are: if no system clock is present, or if the clock rate is very low which reduces overall power consumption.

A.3 Thermal Characteristics

This section provides information about operating temperature range, power dissipation, and package thermal resistance. Power dissipation on I/O pins is usually small compared to the power dissipation in on-chip logic. It is user-determined rather than being controlled by the MCU design. To take PI/O into account in power calculations, determine the difference between actual pin voltage and V_{SS} or V_{DD} and multiply by the pin current for each I/O pin. Except in cases of unusually high pin current (heavy loads), the difference between pin voltage and V_{SS} or V_{DD} will be very small.

Table A-3. Absolute maximum ratings

Rating	Symbol	Value	Unit
Operating temperature range (packaged)	T_A	T_L to T_H -40 to 85	° C
Thermal Resistance [1, 2, 3, 4] 24-pin QFN 1s 2s2p	 θ_{JA}	 92 33	 ° C/W

1. Junction temperature is a function of die size, on-chip power dissipation, package thermal resistance, mounting site (board) temperature, ambient temperature, air flow, power dissipation of other components on the board, and board thermal resistance
2. Junction to Ambient Natural Convection
3. 1s — Single layer board, one signal layer
4. 2s2p — Four layer board, 2 signal and 2 power layers

The average chip-junction temperature (TJ) in × ° C can be obtained from:

$$T_j = T_A + P_{D^{Iq}JA} P_D \times \theta_{JA} \qquad \textit{Eqn. 1}$$

Where:

TA — Ambient temperature,° C

θJA — Package thermal resistance, junction-to-ambient,° C/W

PD — $P + P_{I/O}P = I_{DD} \times V_{DD}$, Watts — chip internal power

$P_{I/O}$ — Power dissipation on input and output pins — user determined

For most applications, $P_{I/O} << P$ and can be neglected. An approximate relationship between P_D and T_J (if $P_{I/O}$ is neglected) is:

$$PD = K \div (T_J + 273°C) \qquad \textit{Eqn. 2}$$

Solving Equation 1 and Equation 2 for K gives:

$$K = P_D \times (T_A + 273°C) + JA \times (P_D)^2 \qquad \textit{Eqn. 3}$$

Where K is a constant pertaining to the particular part. K can be determined from Equation 3 by measuring P_D (at equilibrium) for a known T_A. Using this value of K, the values of P_D and T_J can be obtained by solving Equation 1 and Equation 2 iteratively for any value of T_A.

A.4 Electrostatic Discharge (ESD) Protection Characteristics

Although damage from static discharge is much less common on these devices than on early CMOS circuits, normal handling precautions must be used to avoid exposure to static discharge. Qualification tests are performed to ensure that these devices can withstand exposure to reasonable levels of static without suffering any permanent damage. This device was qualified to AEC-Q100 Rev E. A device is considered to have failed if, after exposure to ESD pulses, the device no longer meets the device specification requirements. Complete DC parametric and functional testing is performed per the applicable device specification at room temperature followed by hot temperature, unless otherwise specified in the device specification.

Table A-4. ESD Protection characteristics

Rating	Symbol	Value	Unit
ESD Target for Machine Model (MM) — MM circuit description	V_{THMM}	200	V
ESD Target for Human Body Model (HBM) — HBM circuit description	V_{THHBM}	2000	V

A.5 DC Characteristics

This section includes information about power supply requirements, I/O pin characteristics, and power supply current in various operating modes.

Table A-5. ESD Protection characteristics

Num	C	Parameter	Symbol	Min	Typical[1]	Max	Unit
1		Operating voltage	—	2.7	—	5.5	V
2	P	Output high voltage 5 V, ILoad = –10 mA 3 V, ILoad = –3 mA 5 V, ILoad = –2 mA 3 V, ILoad = –0.4 mA	V_{OH}	 V_{DD} – 1.5 V_{DD} – 1.5 V_{DD} – 0.8 V_{DD} – 0.8	— — — — —	— — — — —	V
		Output low voltage — Low drive (PTxDSn = 0) 5 V, ILoad = 2 mA 3 V, ILoad = 0.6 mA 5 V, ILoad = 0.4 mA 3 V, ILoad = 0.24 mA	V_{OH}	 1.5 1.5 0.8 0.8	— — — — —	— — — — —	
3	P	Output low voltage — High drive (PTxDSn = 1) 5 V, ILoad = 10 mA 3 V, ILoad = 3 mA 5 V, ILoad = 2 mA 3 V, ILoad = 0.4 mA		 1.5 1.5 0.8 0.8	— — — — —	— — — — —	V

Table A-5. ESD Protection characteristics (continued)

4	P	Output high current — Max total I_{OH} for all ports 5 V 3 V	I_{OHT}	 — —	 — —	 100 60	mA
5	P	Output high current — Max total I_{OL} for all ports 5V 3V	I_{OLT}	 — —	 — —	 100 60	mA
6	P	Input high voltage; all digital inputs	V_{IH}	0.65 x V_{DD}	—	—	V
7	P	Input low voltage; all digital inputs	V_{IL}	—	—	0.35 x V_{DD}	
8	P	Input hysteresis; all digital inputs	V_{HYS}	0.06 x V_{DD}	—	—	Mv
9	P	Input leakage current; input only pins[1]	$\lvert I_{In} \rvert$	—	.01	1	µA
10	P	High Impedance (off-state) leakage current[1]	$\lvert I_{OZ} \rvert$	—	.01	1	µA
11	P	Internal pullup resistors[2] (Resume pin)	R_{PU}	20	45	65	k
12	C	Internal pullup resistor to USBDP (to V_{USB33}) Idle Transmit	R_{PUPD}	 900 1425	 — —	 1575 3090	k
13	C	Input capacitance; all non-supply pins	C_{IN}	—	—	8	pF

1. Measured with $V_{In} = V_{DD}$ or V_{SS}.
2. Measured with $V_{In} = V_{SS}$.

A.6 Supply Current Characteristics

Table A-6. Supply current characteristics

Num	C	Parameter	Symbol	V_{DD} (V)	Typical[1]	Max	Unit
1	P	Run supply current	R_{IDD}	5	19.93	—	mA
				3	18.74	—	mA

Appendix B Package Information

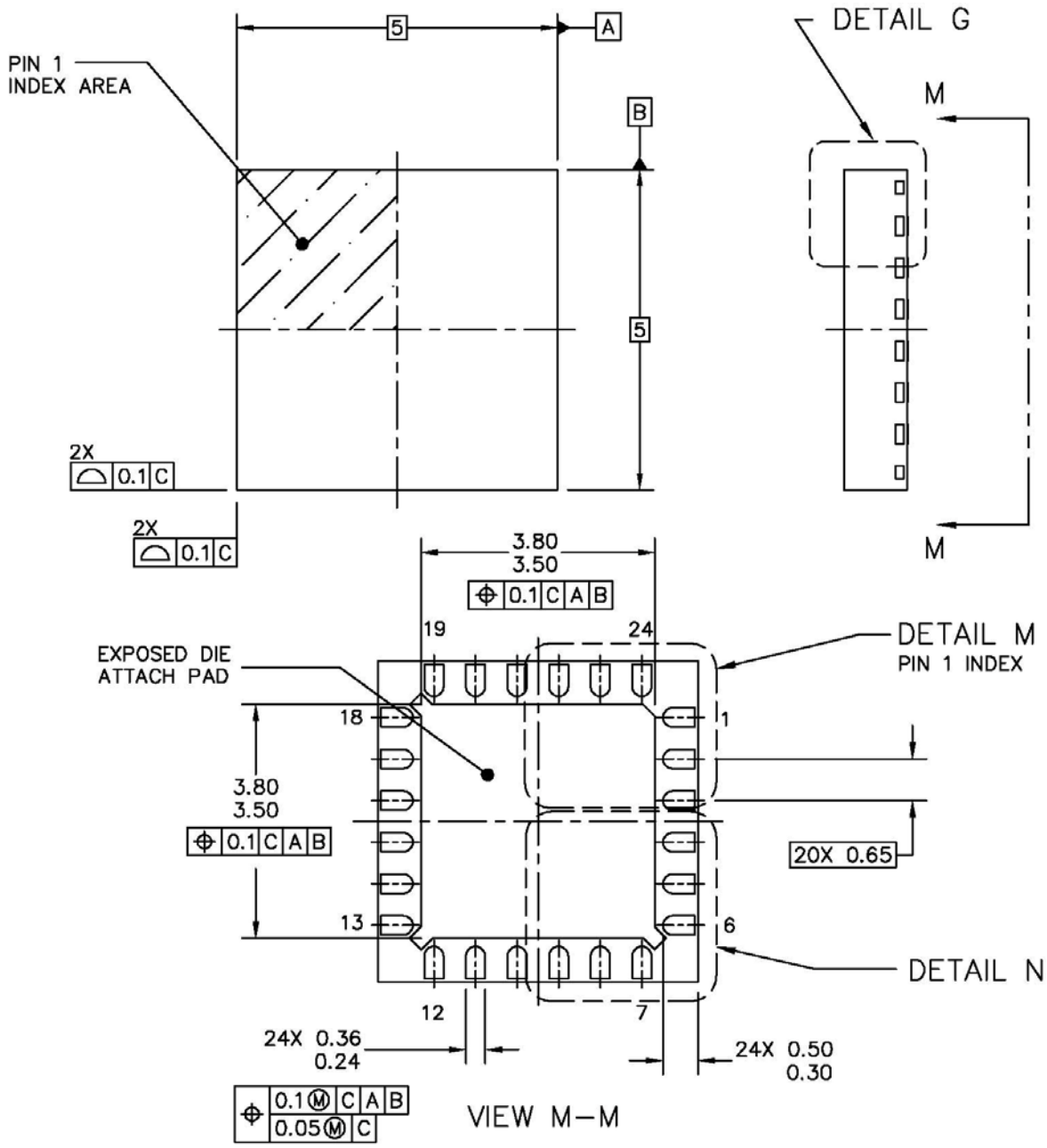

© FREESCALE SEMICONDUCTOR, INC. ALL RIGHTS RESERVED.	MECHANICAL OUTLINE	PRINT VERSION NOT TO SCALE
TITLE: THERMALLY ENHANCED QUAD FLAT NON–LEADED PACKAGE (QFN) 24 TERMINAL, 0.65 PITCH (5 X 5 X 1)	DOCUMENT NO: 98ARL10608D	REV: A
	CASE NUMBER: 1982–02	21 APR 2010
	STANDARD: JEDEC–MO–220 VHHC–1	

NOTES:

1. DIMENSIONS ARE IN MILLIMETERS.
2. INTERPRET DIMENSIONS AND TOLERANCES PER ASME Y14.5M–1994.
3. THE COMPLETE JEDEC DESIGNATOR FOR THIS PACKAGE IS: HF–PQFN.
4. COPLANARITY APPLIES TO LEADS, CORNER LEADS, AND DIE ATTACH PAD.
5. MIN METAL GAP SHOULD BE 0.2MM.

© FREESCALE SEMICONDUCTOR, INC. ALL RIGHTS RESERVED.	**MECHANICAL OUTLINE**	PRINT VERSION NOT TO SCALE	
TITLE: THERMALLY ENHANCED QUAD FLAT NON–LEADED PACKAGE (QFN) 24 TERMINAL, 0.65 PITCH (5 X 5 X 1)	DOCUMENT NO: 98ARL10608D	REV: A	
	CASE NUMBER: 1982–02	21 APR 2010	
	STANDARD: JEDEC–MO–220 VHHC–1		

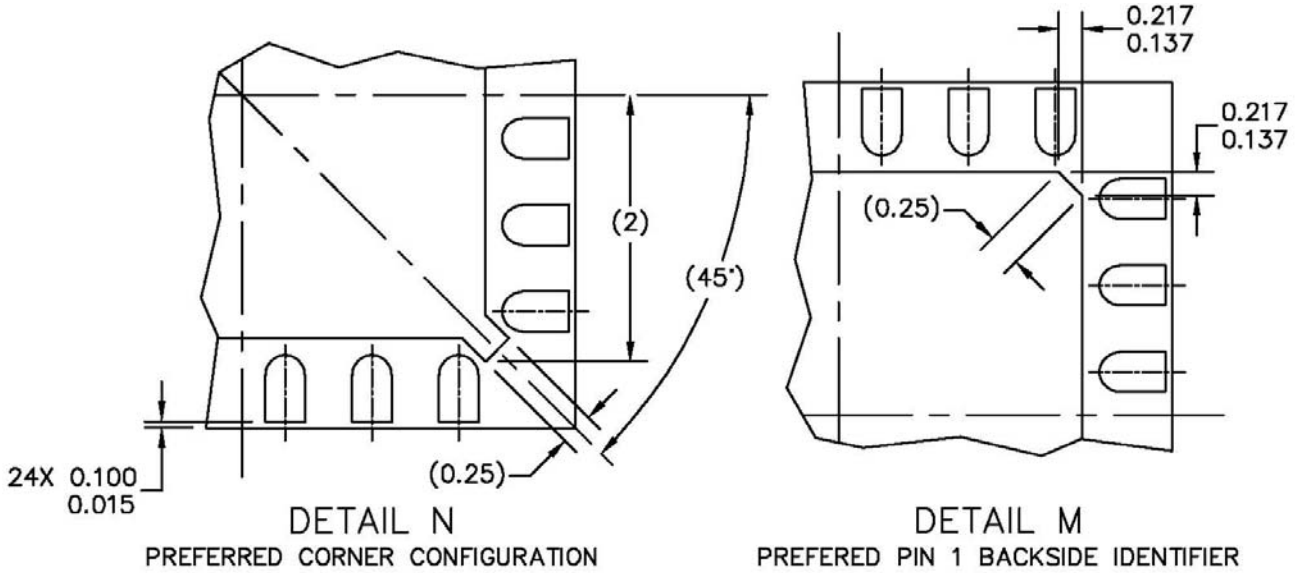

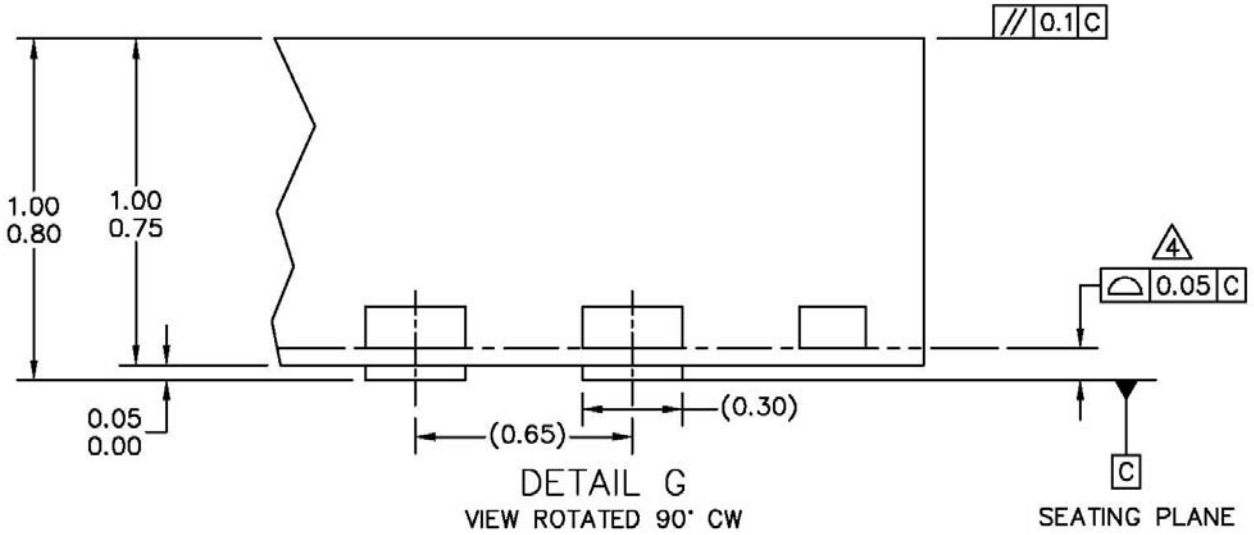

© FREESCALE SEMICONDUCTOR, INC. ALL RIGHTS RESERVED.	MECHANICAL OUTLINE	PRINT VERSION NOT TO SCALE
TITLE: THERMALLY ENHANCED QUAD FLAT NON-LEADED PACKAGE (QFN) 24 TERMINAL, 0.65 PITCH (5 X 5 X 1)	DOCUMENT NO: 98ARL10608D	REV: A
	CASE NUMBER: 1982-02	21 APR 2010
	STANDARD: JEDEC-MO-220 VHHC-1	

Appendix C INF File

```
;copyright Freescale Semiconductor INC.
;-----------------------------------------------------------------------------
;                                   Freescale Semiconductor INC.
;                               Communication Device Class(CDC) INF File
;-----------------------------------------------------------------------------
[Driver32.ntx86]
include=mdmcpq.inf
CopyFiles=FakeModemCopyFileSection

[Driver32.ntx86.HW]
include=mdmcpq.inf
AddReg=Driver32.ntx86.AddReg

[Driver32.ntx86.Wdf]
KmdfService = %DRIVERFILENAME%, MyDevice_wdfsect

[Driver32.ntx86.AddReg]
HKR,,NTMPDriver,,%DRIVERFILENAME%.sys

[Driver32.ntx86.Services]
include=mdmcpq.inf
AddService=%DRIVERFILENAME%, 0x00000002, DriverService32.ntx86

[DriverService32.ntx86]
DisplayName=%SERVICE%
ServiceType=1
StartType=3
ErrorControl=1
ServiceBinary=%12%\%DRIVERFILENAME%.sys

;-----------------------------------------------------------------------------
;                                64 bits / Windows XP / Vista / 7
;-----------------------------------------------------------------------------

[Driver64WV.ntamd64]
include=mdmcpq.inf
CopyFiles=FakeModemCopyFileSection

[Driver64WV.ntamd64.HW]
include=mdmcpq.inf
AddReg=Driver64WV.ntamd64.AddReg

[Driver64WV.ntamd64.Wdf]
KmdfService = %DRIVERFILENAME%, MyDevice_wdfsect

[Driver64WV.ntamd64.AddReg]
HKR,,NTMPDriver,,%DRIVERFILENAME%.sys

[Driver64WV.ntamd64.Services]
include=mdmcpq.inf
AddService=%DRIVERFILENAME%, 0x00000002, DriverService64WV.ntamd64

[DriverService64WV.ntamd64]
DisplayName=%SERVICE%
ServiceType=1
```

```
StartType=3
ErrorControl=1
ServiceBinary=%12%\%DRIVERFILENAME%.sys

;-------------------------------------------------------------------------------
;                                                        32 bits / 64 bits
;-------------------------------------------------------------------------------

[MyDevice_CoInstaller_AddReg]
HKR,,CoInstallers32,0x00010000, "WdfCoInstaller01009.dll,WdfCoInstaller"

[MyDevice_CoInstaller_CopyFiles]
WdfCoInstaller01009.dll

[MyDevice_wdfsect]
KmdfLibraryVersion = 1.9

;-------------------------------------------------------------------------------
;                                                VID/PID Settings
;-------------------------------------------------------------------------------
[SourceDisksNames]
1 = %SOURCE_DESCRIPTION%

[DeviceList.ntx86]
%DESCRIPTION%=Driver32, USB\VID_15A2&PID_005A
%DESCRIPTION%=Driver32, USB\VID_15A2&PID_0066

[DeviceList.ntamd64]
%DESCRIPTION%=Driver64WV, USB\VID_15A2&PID_005A
%DESCRIPTION%=Driver64WV, USB\VID_15A2&PID_0066

[DeviceList.ntamd64.6.0]
%DESCRIPTION%=Driver64WV, USB\VID_15A2&PID_005A
%DESCRIPTION%=Driver64WV, USB\VID_15A2&PID_0066

;-------------------------------------------------------------------------------
;                                                String Definitions
;-------------------------------------------------------------------------------
[Strings]
DRIVERFILENAME ="usbser"
MANUFACTURER="Freescale Semiconductor Inc"
DESCRIPTION="Freescale CDC Device"
SERVICE="Virtual Com Driver"
SOURCE_DESCRIPTION="Fresscale CDC driver"
```

Appendix D USB2SEREVB Layout, Schematics, and BOM

D.1 Board Layout

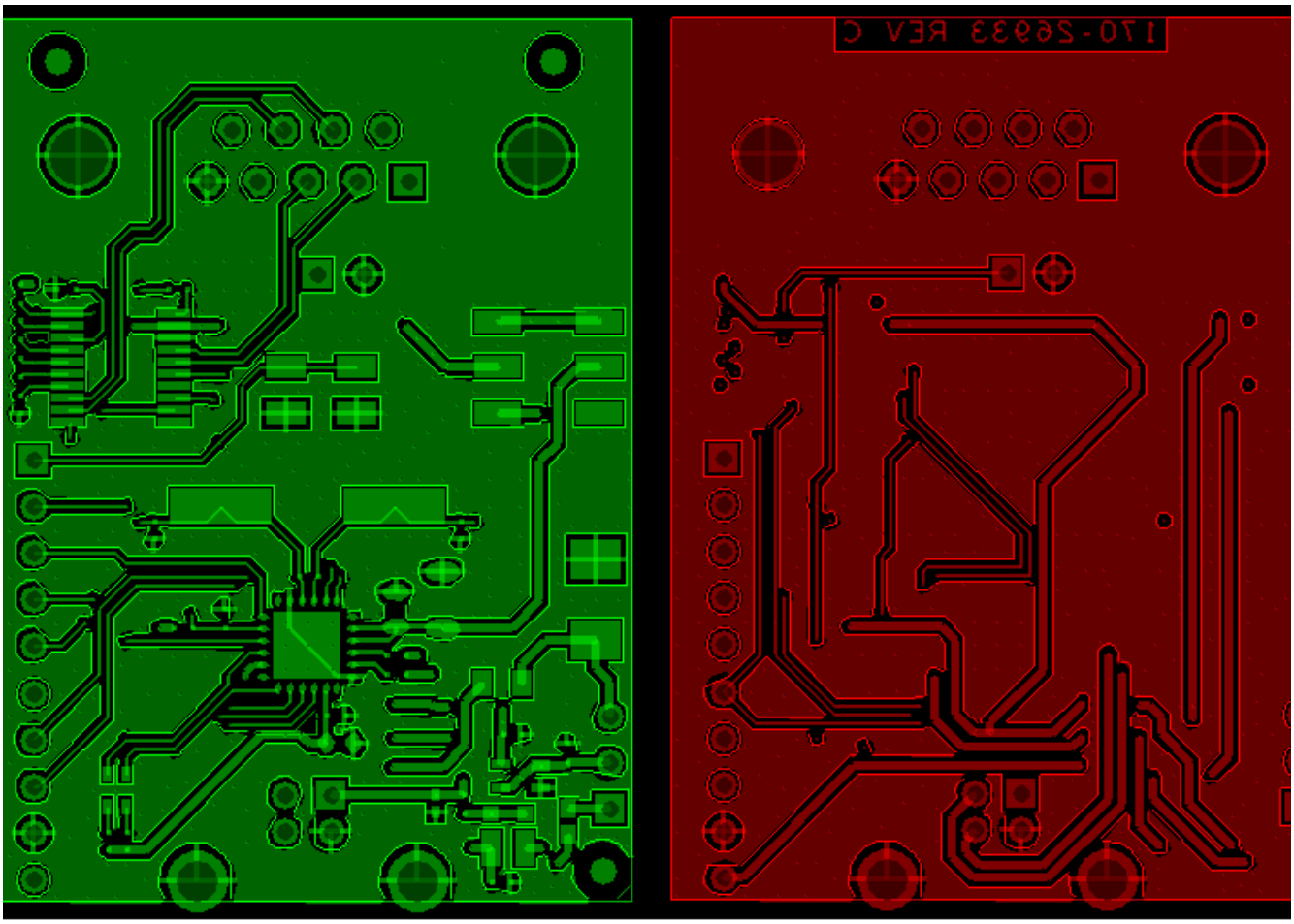

D.2 Schematics

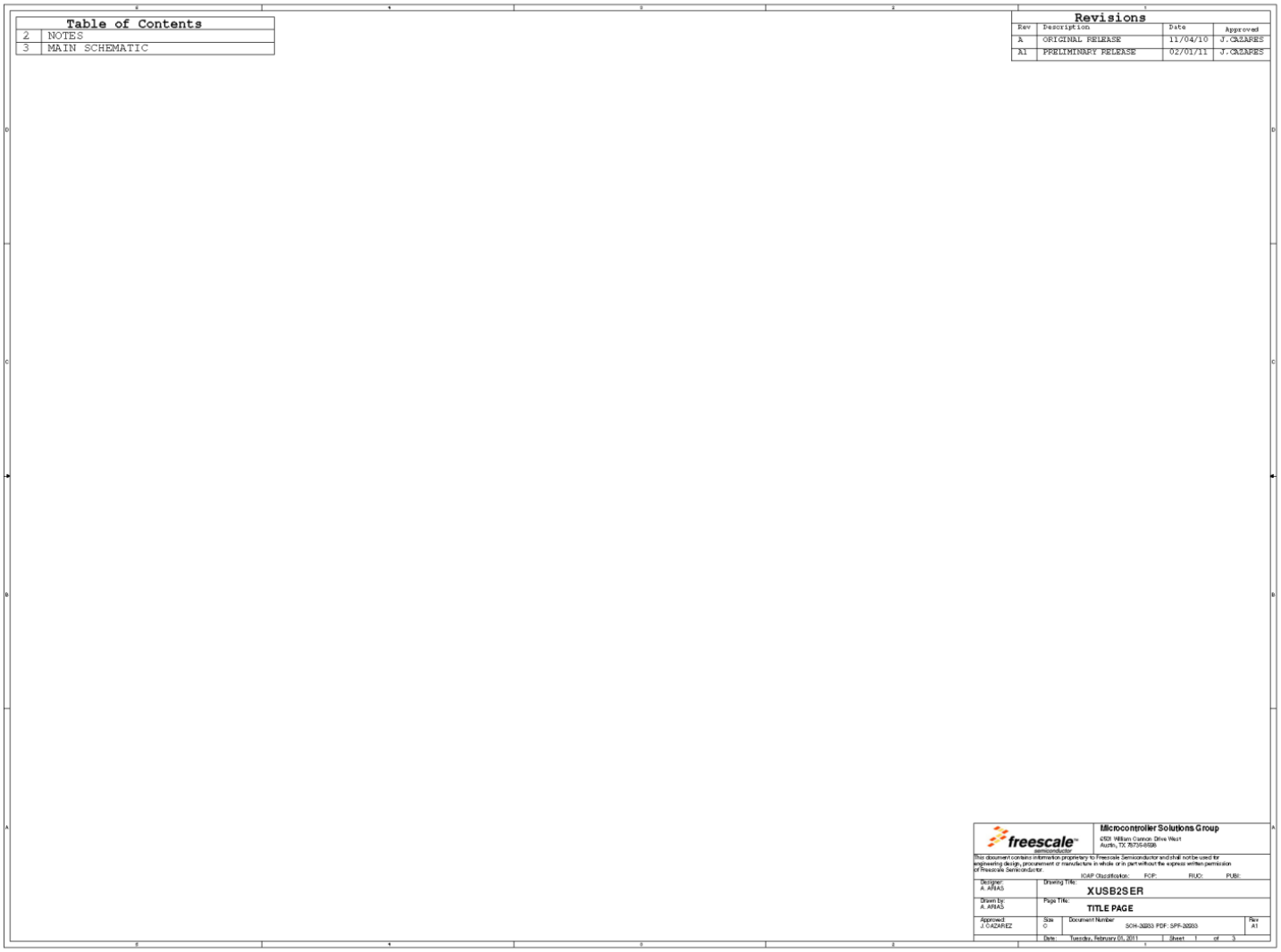

1. Unless Otherwise Specified:
   All resistors are in ohms, 5%, 1/8 Watt
   All capacitors are in uF, 20%, 50V
   All voltages are DC
   All polarized capacitors are aluminum electrolytic

2. Interrupted lines coded with the same letter or letter combinations are electrically connected.

3. Device type number is for reference only. The number varies with the manufacturer.

4. Special signal usage:
   _B Denotes - Active-Low Signal
   <> or [] Denotes - Vectored Signals

5. Interpret diagram in accordance with American National Standards Institute specifications, current revision, with the exception of logic block symbology.

freescale semiconductor

ICAP Classification: POP: ___ RUO: X PUB: ___

Drawing Title: XUSB2SER

Page Title: NOTES

Size	Document Number	Rev
C	SCH-30283 PDF: SPF-30283	A1

Date: Tuesday, February 01, 2011 Sheet 2 of 3

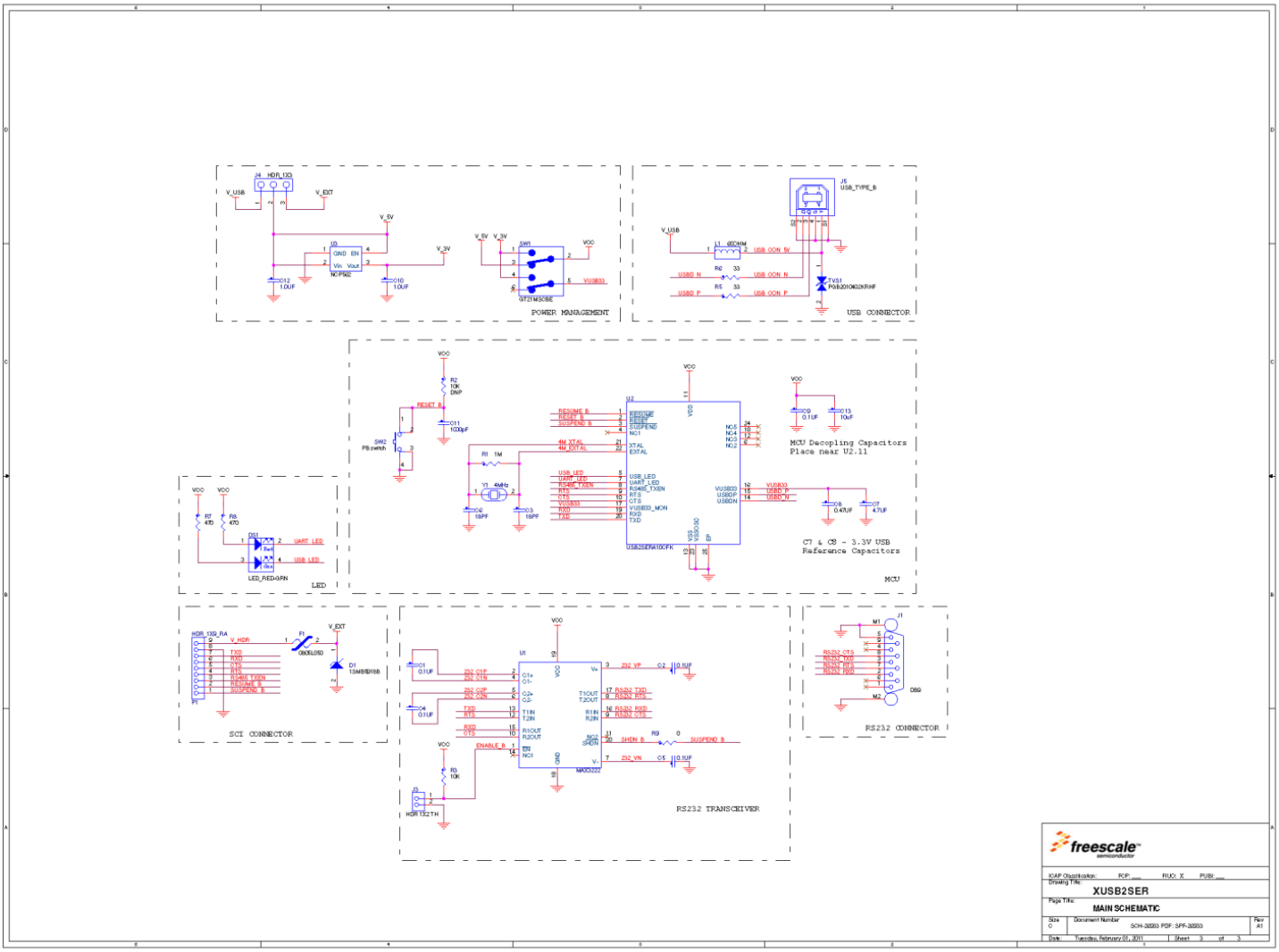
POWER MANAGEMENT
USB CONNECTOR
MCU Decoupling Capacitors
Place near U2.11
C7 & C8 - 3.3V USB
Reference Capacitors
MCU
LED
SCI CONNECTOR
RS232 TRANSCEIVER
RS232 CONNECTOR
XUSB2SER
MAIN SCHEMATIC

D.3 Bill of Materials

Table 2. BOM

Quantity	Description	Reference
1	CAP CER 0.47UF 25V 10% X7R 0805	C8
2	CAP CER 1.0UF 6.3V 10% X5R 0402	C10,C12
5	CAP CER 0.1UF 10V 10% X5R 0402	C1,C2,C4,C5,C9
2	CAP CER 18PF 50V 5% C0G 0402	C3,C6
1	CAP CER 1000PF 50V 5% C0G 0402	C11
1	CAP CER 4.7uF 25V 10% X7R 1206	C7
1	CAP CER 10UF 10V 20% X5R 0603	C13
1	IND FER BEAD 60OHM@100MHZ 500MA -- 0603	L1
1	HDR 1X3 TH 100MIL SP 374H AU	J4
1	HDR 1X2 TH 100MIL SP 339H AU 98L	J3
1	CON 9 DB 0.318 PLUG RA SHLD TH 54MIL SP 494H AU W/ BRD LOCKS	J1
1	CON 2X2 USB_TYPE_B SKT RA SHLD TH 2.5MM SP 453H AU	J5
1	HDR 1X9 TH 100MIL SP 330H SN	P1
2	TEST POINT PAD 40MIL DIA SMT, NO PART TO ORDER	TP1,TP2
1	XTAL 4MHZ -- 18PF 20PPM SMT	Y1
1	IC VREG LDO 3.3V 80MA 6.0V SC82-AB	U3
1	IC USB2SERA10CFK	U2
1	IC XCVR RS232 2 DRV 2 RCV 235KBPS 3.0-5.5V TSSOP20	U1
1	LED RED/GRN DUAL 20MA SMD	DS1
1	RES MF 1.0M 1/16W 1% 0402	R1
2	RES MF 470 OHM 1/16W 5% 0402	R7,R8
1	RES MF ZERO OHM 1/16W 5% 0402	R9
1	RES MF 10K 1/16W 5% 0402	R3
2	RES MF 33.0 OHM 1/16W 1% 0402	R5,R6
1	DIODE ZNR 3W 5.1V SMB	D1
1	DIODE ESD SUPPRESSOR BIDIR -- 12V 0402	TVS1
1	SW DPDT SMT 0.4VA@20VAC/DC	SW1
1	FUSE PTC 0.5A 6V SMT	F1
0	RES MF 10K 1/16W 5% 0402	R2

How to Reach Us:

Home Page:
www.freescale.com

Web Support:
http://www.freescale.com/support

USA/Europe or Locations Not Listed:
Freescale Semiconductor, Inc.
Technical Information Center, EL516
2100 East Elliot Road
Tempe, Arizona 85284
1-800-521-6274 or +1-480-768-2130
www.freescale.com/support

Europe, Middle East, and Africa:
Freescale Halbleiter Deutschland GmbH
Technical Information Center
Schatzbogen 7
81829 Muenchen, Germany
+44 1296 380 456 (English)
+46 8 52200080 (English)
+49 89 92103 559 (German)
+33 1 69 35 48 48 (French)
www.freescale.com/support

Japan:
Freescale Semiconductor Japan Ltd. Headquarters
ARCO Tower 15F
1-8-1, Shimo-Meguro, Meguro-ku,
Tokyo 153-0064
Japan
0120 191014 or +81 3 5437 9125
support.japan@freescale.com

Asia/Pacific:
Freescale Semiconductor China Ltd.
Exchange Building 23F
No. 118 Jianguo Road
Chaoyang District
Beijing 100022
China
+86 10 5879 8000
support.asia@freescale.com

Freescale Semiconductor Literature Distribution Center
1-800-441-2447 or +1-303-675-2140
Fax: +1-303-675-2150
LDCForFreescaleSemiconductor@hibbertgroup.com

Information in this document is provided solely to enable system and software implementers to use Freescale Semiconductor products. There are no express or implied copyright licenses granted hereunder to design or fabricate any integrated circuits or integrated circuits based on the information in this document.

Freescale Semiconductor reserves the right to make changes without further notice to any products herein. Freescale Semiconductor makes no warranty, representation or guarantee regarding the suitability of its products for any particular purpose, nor does Freescale Semiconductor assume any liability arising out of the application or use of any product or circuit, and specifically disclaims any and all liability, including without limitation consequential or incidental damages. “Typical” parameters that may be provided in Freescale Semiconductor data sheets and/or specifications can and do vary in different applications and actual performance may vary over time. All operating parameters, including “Typicals”, must be validated for each customer application by customer’s technical experts. Freescale Semiconductor does not convey any license under its patent rights nor the rights of others. Freescale Semiconductor products are not designed, intended, or authorized for use as components in systems intended for surgical implant into the body, or other applications intended to support or sustain life, or for any other application in which the failure of the Freescale Semiconductor product could create a situation where personal injury or death may occur. Should Buyer purchase or use Freescale Semiconductor products for any such unintended or unauthorized application, Buyer shall indemnify and hold Freescale Semiconductor and its officers, employees, subsidiaries, affiliates, and distributors harmless against all claims, costs, damages, and expenses, and reasonable attorney fees arising out of, directly or indirectly, any claim of personal injury or death associated with such unintended or unauthorized use, even if such claim alleges that Freescale Semiconductor was negligent regarding the design or manufacture of the part.

Freescale and the Freescale logo are trademarks of Freescale Semiconductor, Inc., Reg. U.S. Pat. & Tm. Off. Ready Play is a trademark of Freescale Semiconductor, Inc. All other product or service names are the property of their respective owners. © 2011 Freescale Semiconductor, Inc. All rights reserved.

USB2SERA11DS
Rev. 0
10/2012